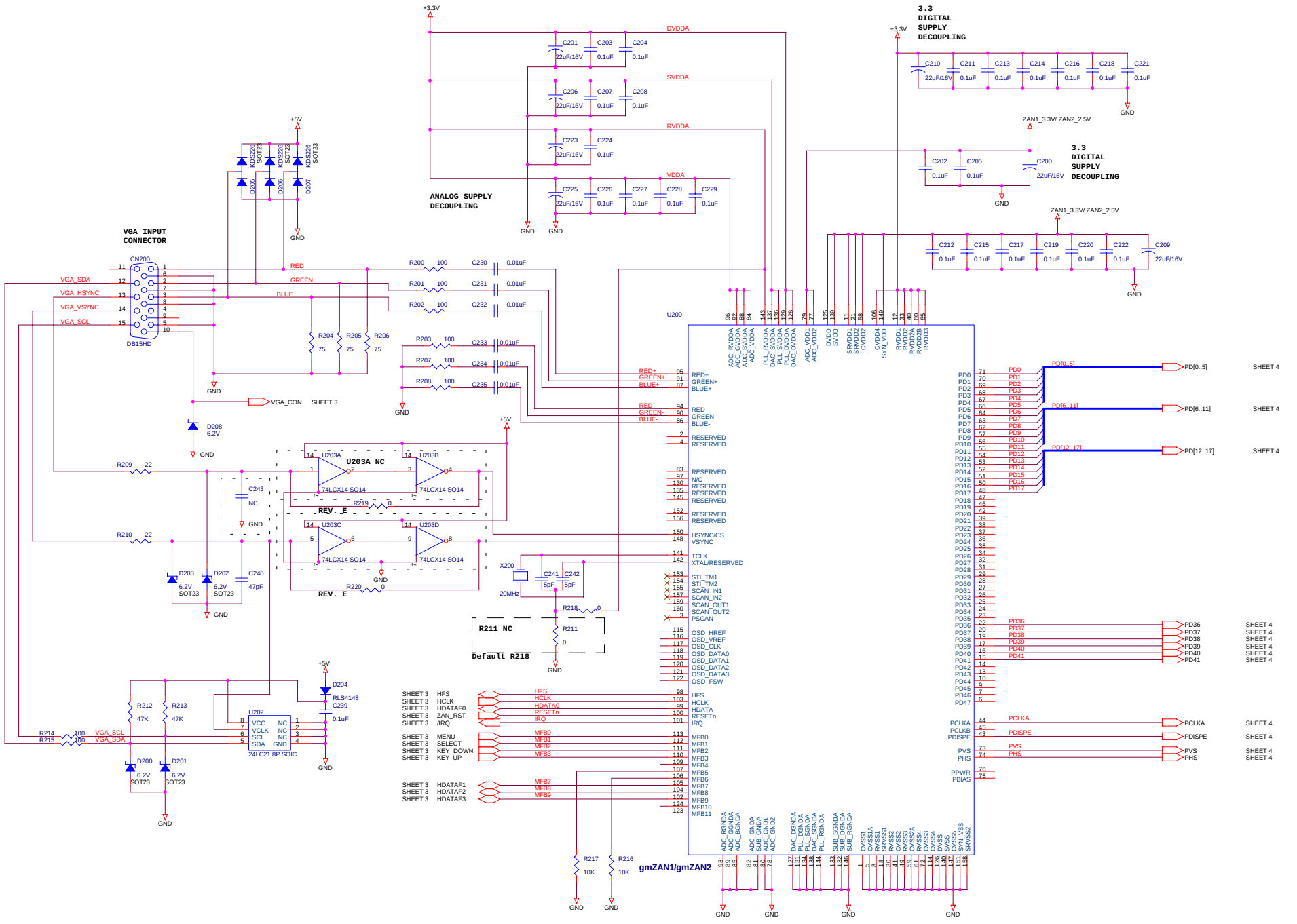

Title: 2. gmZAN2

Size: C | Document Number: NONE | Rev: E

Date: Thursday, November 29, 2001 | Sheet 2 of 5

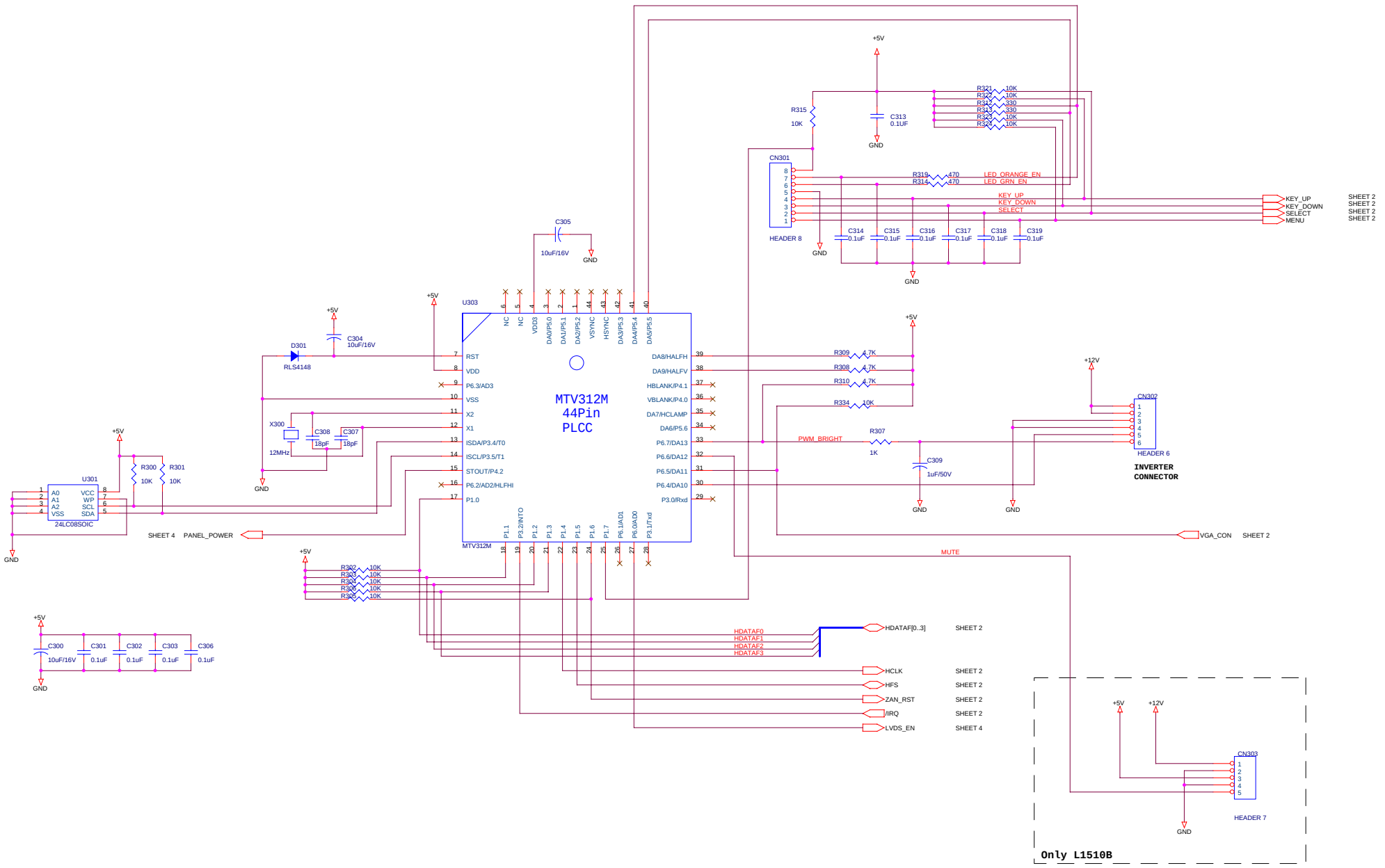

Title: 3. MCU(MTV312M)

Size: C | Document Number: NONE | Rev: E

Date: Thursday, November 29, 2001 | Sheet 3 of 5

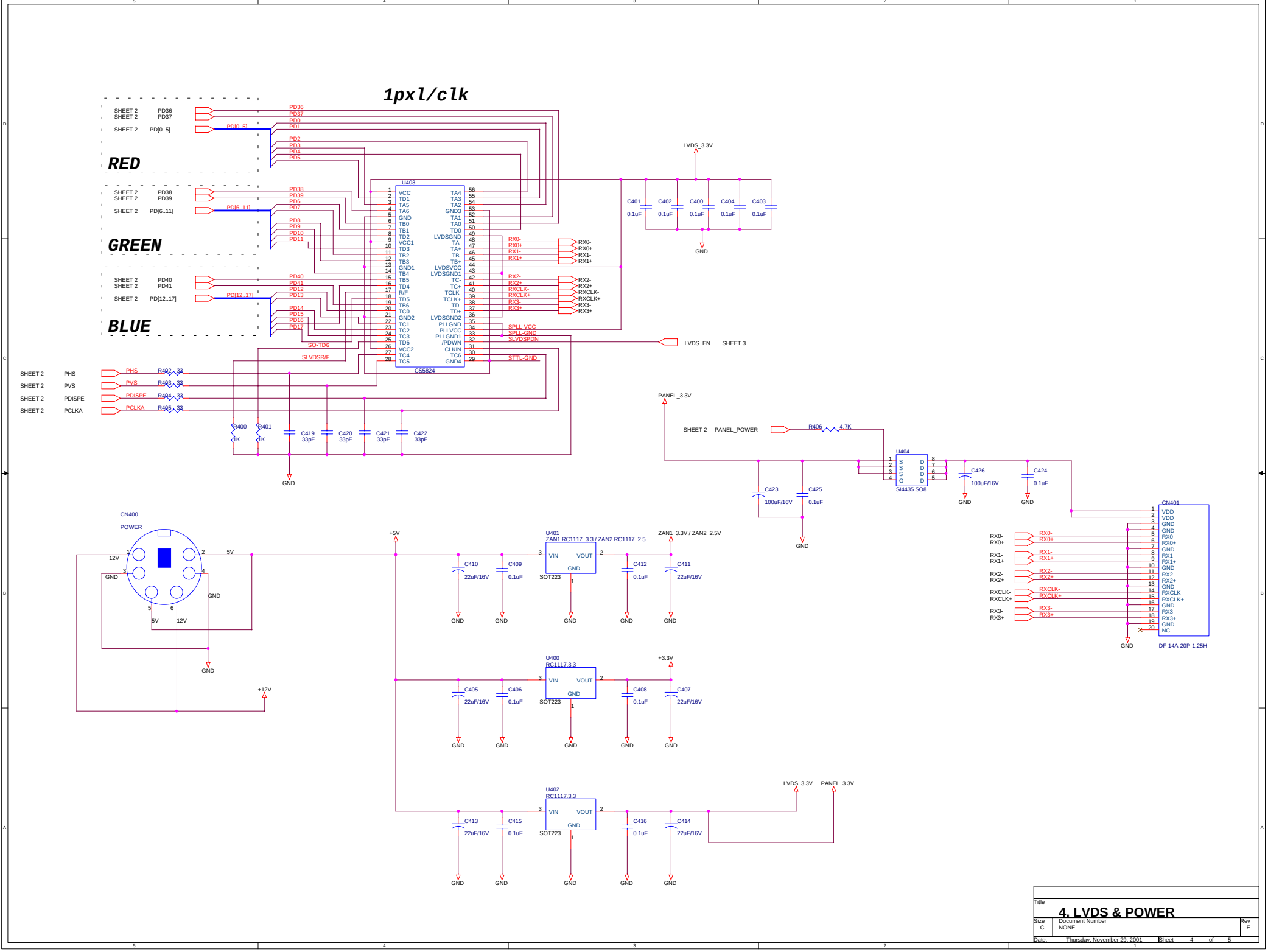
1pxl/clk
RED
GREEN
BLUE
SHEET 2 PD36
SHEET 2 PD37
SHEET 2 PD[0..5]
SHEET 2 PD38
SHEET 2 PD39
SHEET 2 PD[6..11]
SHEET 2 PD40
SHEET 2 PD41
SHEET 2 PD[12..17]
U403
CS5824
LVDS_3.3V
C401 0.1uF
C402 0.1uF
C400 0.1uF
C404 0.1uF
C403 0.1uF
GND
RX0-
RX0+
RX1-
RX1+
RX2-
RX2+
RXCLK-
RXCLK+
RX3-
RX3+
SPLL-VCC
SPLL-GND
SLVDSPDN
STTL-GND
LVDS_EN SHEET 3
SO-TD6
SLVDSR/F
SHEET 2 PHS
SHEET 2 PVS
SHEET 2 PDISPE
SHEET 2 PCLKA
R402 33
R403 33
R404 33
R405 33
R400 1K
R401 1K
C419 33pF
C420 33pF
C421 33pF
C422 33pF
PANEL_3.3V
SHEET 2 PANEL_POWER
R406 4.7K
U404
SI4435 SO8
C423 100uF/16V
C425 0.1uF
C426 100uF/16V
C424 0.1uF
CN400
POWER
12V
5V
GND
+12V
+5V
U401
ZAN1 RC1117_3.3 / ZAN2 RC1117_2.5
VIN VOUT
SOT223
C410 22uF/16V
C409 0.1uF
C412 0.1uF
C411 22uF/16V
ZAN1_3.3V / ZAN2_2.5V
U400
RC1117.3.3
C405 22uF/16V
C406 0.1uF
C408 0.1uF
C407 22uF/16V
+3.3V
U402
RC1117.3.3
C413 22uF/16V
C415 0.1uF
C416 0.1uF
C414 22uF/16V
LVDS_3.3V PANEL_3.3V
CN401
VDD
GND
NC
DF-14A-20P-1.25H
Title
4. LVDS & POWER
Size C
Document Number NONE
Rev E
Date: Thursday, November 29, 2001
Sheet 4 of 5